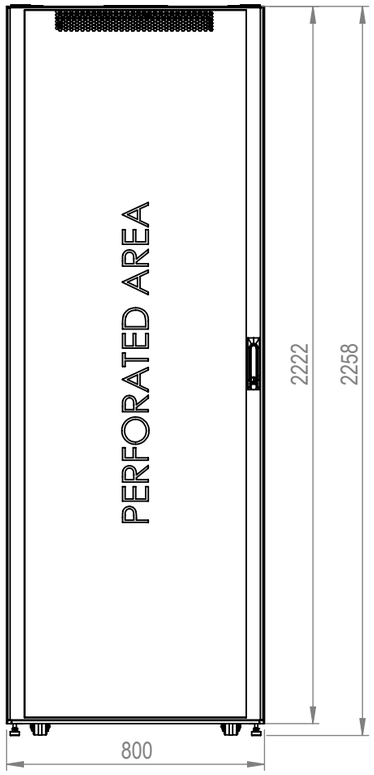

FRONT VIEW

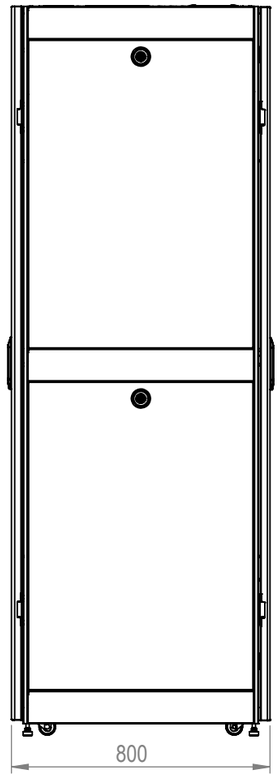

SIDE VIEW

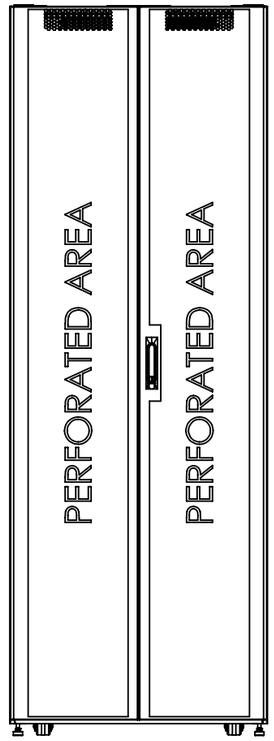

REAR VIEW

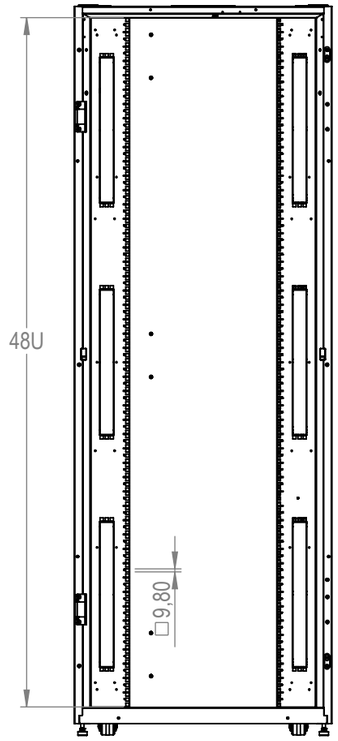

FRONT INNER VIEW

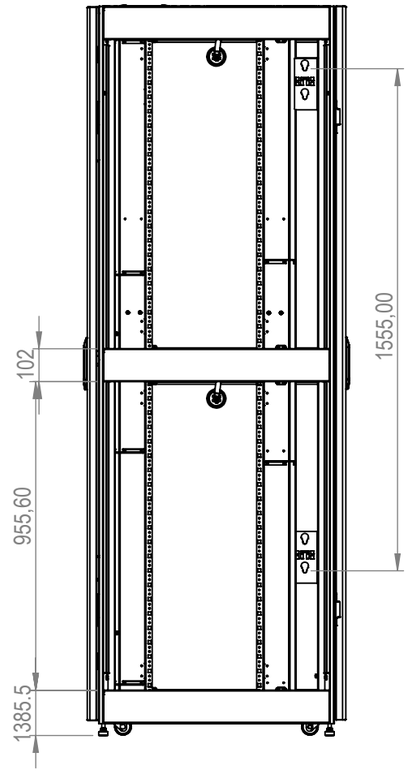

SIDE INNER VIEW

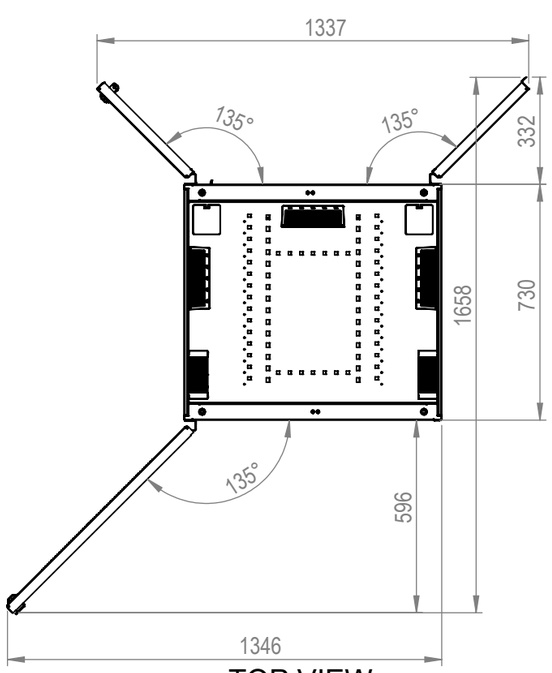

TOP VIEW

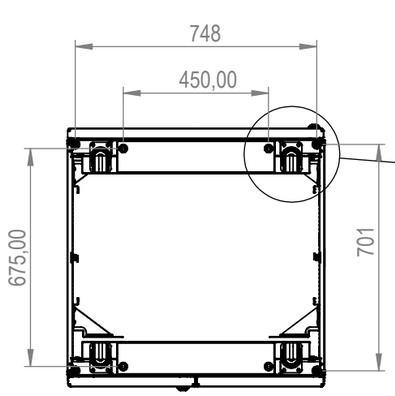

BOTTOM VIEW

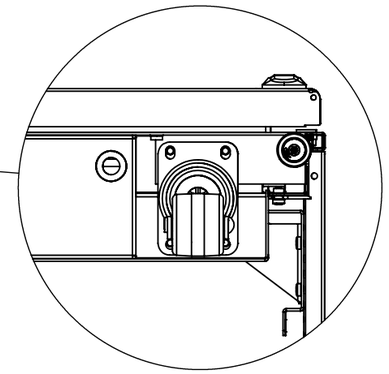

PRODUCT CODE

LN-SRDC-48U8080-SV-CC-DGAA

LN-SRDC-48U8080-SV-CC-DG00

lande RACK CABINET

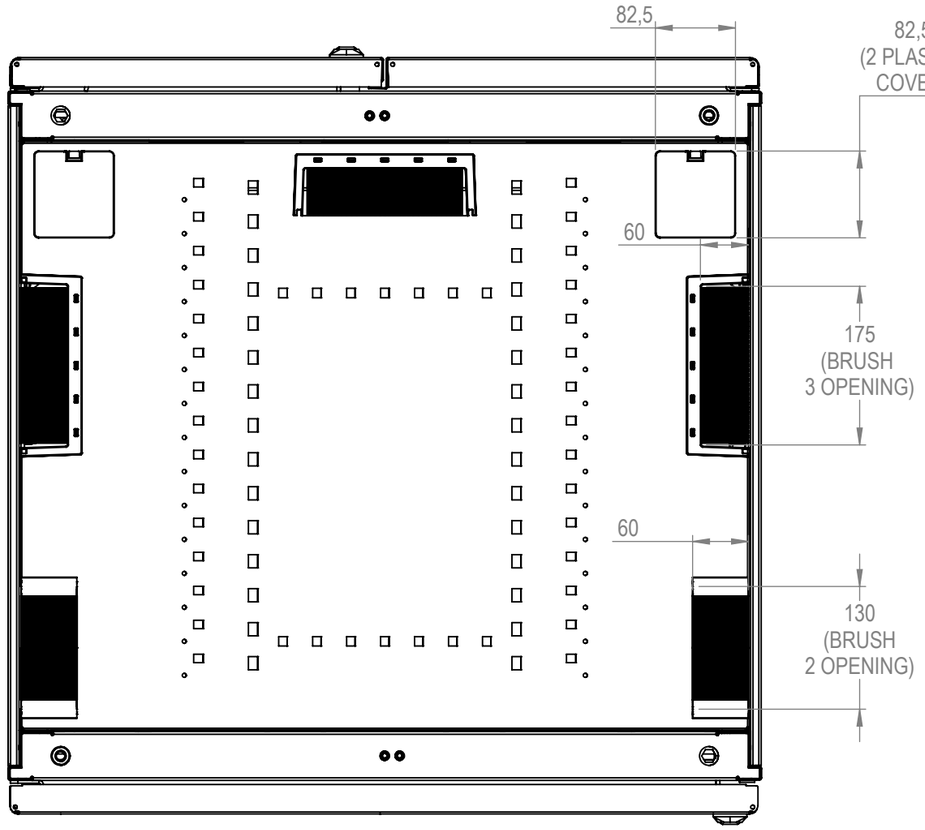

TOP VIEW
(details)

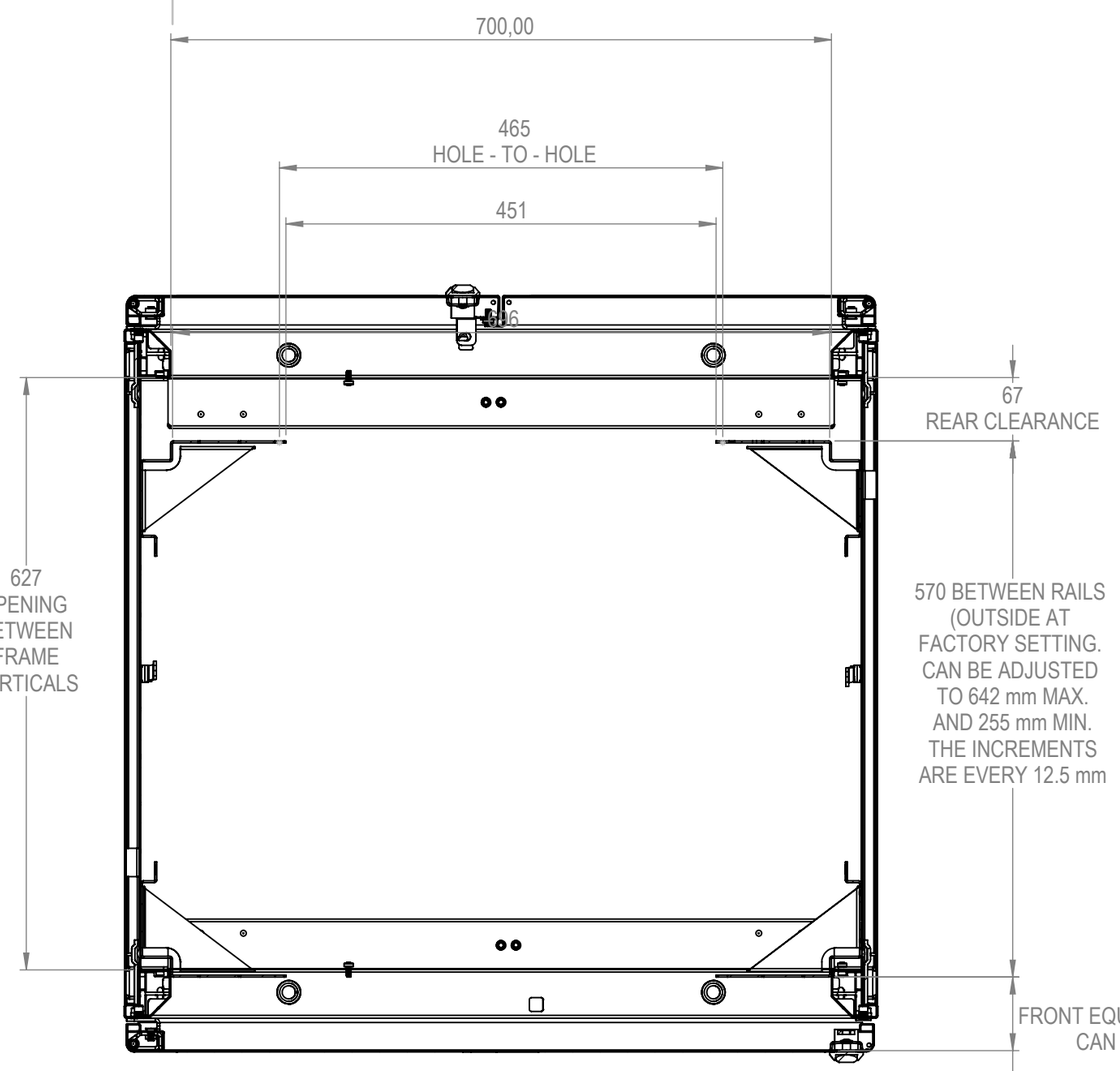

STANDARD POSITIONS
FOR MOUNTING RAILS AND
THEIR ADJUSTABILITY

PRODUCT CODE

LN-SRDC-48U8080-SV-CC-DGAA

LN-SRDC-48U8080-SV-CC-DG00

lande
RACK CABINET

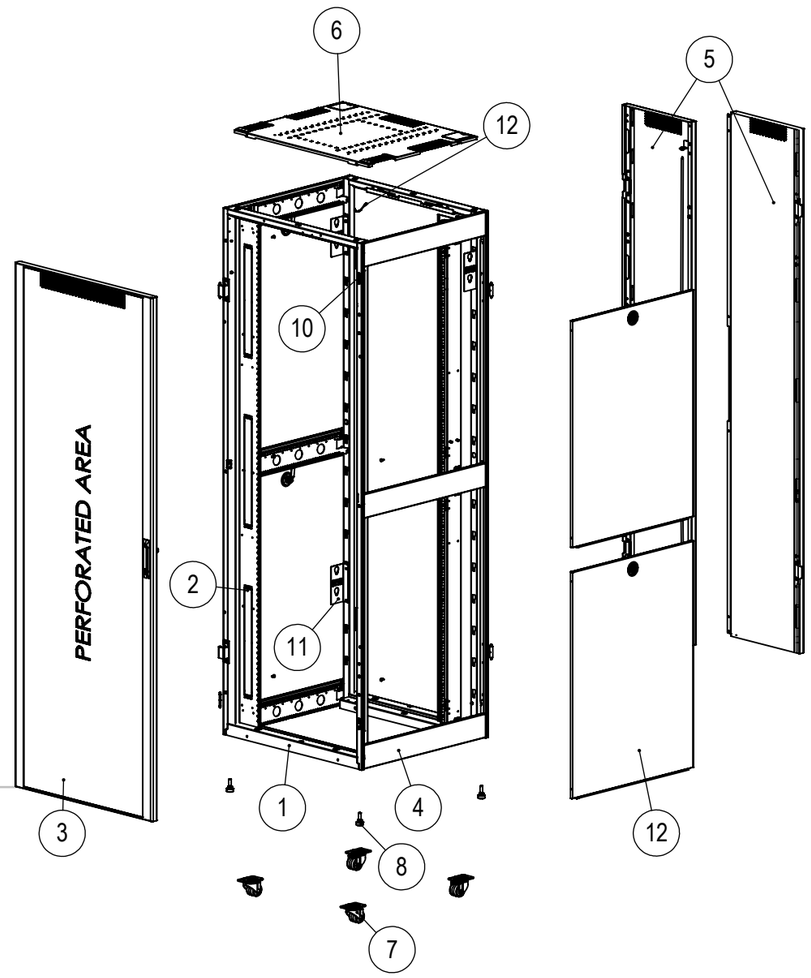

1 :
- MAIN FRAME(WELDED)
- MATERIAL THICKNESS 1.5 AND 2 mm
- 2 ea.

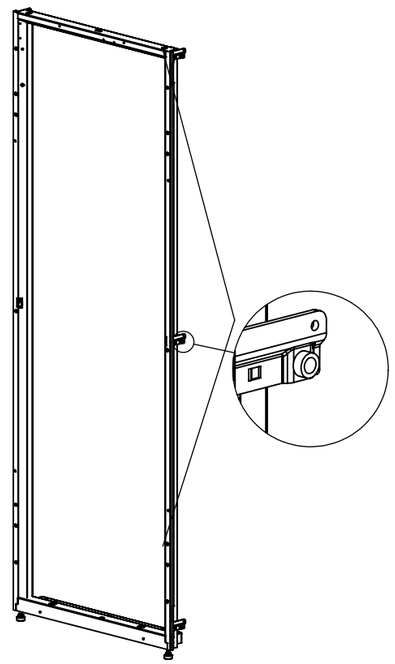

2 :
- MOUNTIN RAILS
- MATERIAL THICKNESS 2 mm
- 4 ea.

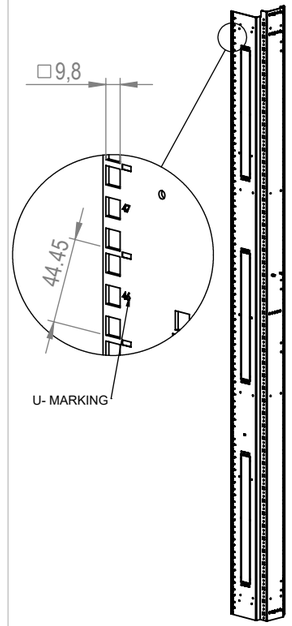

3 :
- FRONT DOOR
- %80 PERFORATED
- MATERIAL THICKNESS 1.2 mm
- 1 ea.
- SINGLE POINT HANDELOCK

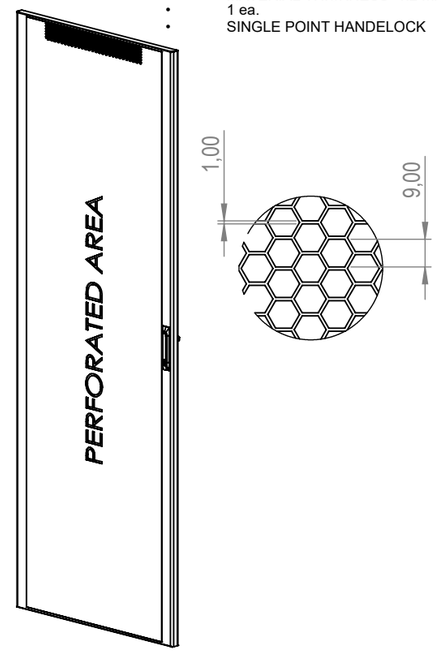

4
- CLOSED PROFILE DEPTH SUPPORT
- MATERIAL THICKNESS 1.5 mm
- 4 ea.

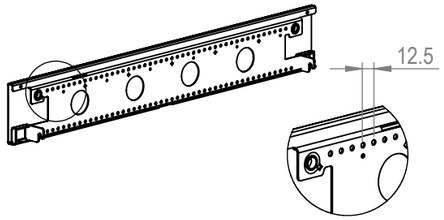

5
- REAR DOORS(LEFT / RIGHT)
- %80 PERFORATED
- MATERIAL THICKNESS 1.2 mm
- HANDLE LOCK
- WITH 3 POINT LOCKING MECH

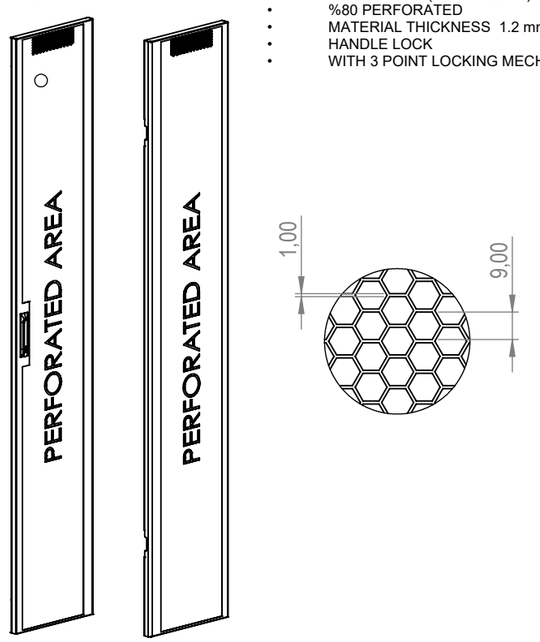

6
- TOP PANEL / REINFORECD WITH WELDED PROFILES
- MATERIAL THICKNESS 0.8 mm
- 1 ea.

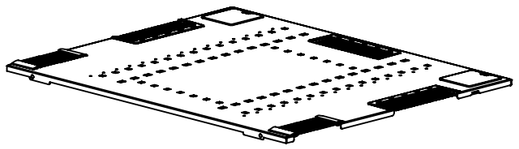

7 :
- CASTOR HEAVY DUTY
- 4 ea.

8 :
- LEVELING FEET
- 4 ea.

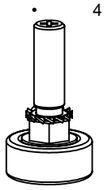

9 :
- BYING KIT
- 4 ea.
- 2 REAR
- 2 FRONT

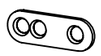

10 :
- PDU MOUNTING BRACKET
- MATERIAL THICKNESS 1.5 mm
- 4 ea.

11 :
- GROUNDING KIT
- 3 ea.

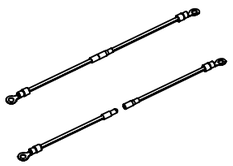

12 :
- SIDE PANEL
- MATERIAL THICKNESS 0.8 mm
- 4 ea.
- "O" LOCK

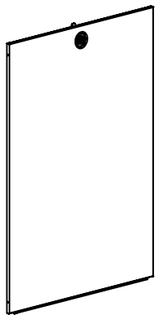

LN-SRDC-48U8080-SV-CC-DGAA

LN-SRDC-48U8080-SV-CC-DG00**

PRODUCT CODE

LN-SRDC-48U8080-SV-CC-DGAA

LN-SRDC-48U8080-SV-CC-DG00

lande RACK CABINET